SEW
PERSONAL SAFETY H.V. DETECTOR

CE

286 SVD is a sensor for sensing AC High Voltage. It provides electric engineering personnel, power engineering personnel, firefighting personnel and instrument equipment workers with prominent warning when approaching high voltage projects.

METHOD OF USE

- Inspection before use
  (1) Check the appearance and structure for any abnormality.
  (2) Press Self-Test switch (about 10 seconds) to confirm all functions are working normally.
  (3) To be careful and to avoid misjudgment, test the unit by contacting AC 110V insulated wire with its front side to see if it sounds and flashes.
- Wearing
  (1) Wear the unit in front of the safety helmet.
  (2) Wear the unit at the pocket in front of your shirt (chest).
  (3) Wear the unit to the outer side of fore arm with the sensing side faces outwardly.
  ※ The effect is best when the sensing side is facing high voltage in right angle (90 Deg.). When it is worn at the inner side of arm or is covered by cloth, the sensitivity is poorer.

(1)

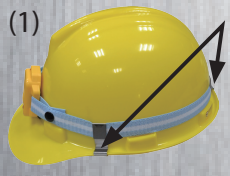

3 hooks hold the elastic cord around the safety helmet.

(2)

(3)

- Compact, easy to wear and convenient in use.
- Usable both indoor and outdoor.
- Water-proof design. (IP65)
- Equipped with self-testing functions.
- Able to sense all kinds of AC High Voltage System.
- Low power consumption.
- CE Certified.

※ 286 SVD The ideal detection angle

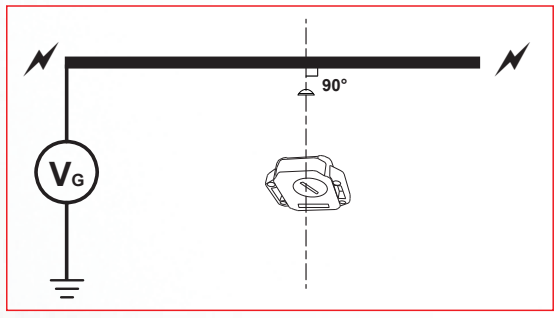

SPECIFICATIONS

- Distance of starting warning :
  80 cm for 11.4KV (phase to ground)
- Applicable frequency : 50 / 60 Hz
- Volume : 70dB or higher at 1 meter distance
- Operating Temp & Humidity : 0°C - 40°C / 80% RH.
- Outside dimensions : 59(L) x 56(W) x18(D) mm
- Weight : 35g (incl. battery)
- Battery type : CR2032
- Battery life : 50 hours for continuous use.
- Accessories :
  Instruction manual
  Elastic cord, Hook, Battery
  Skidproof cushion, Bracket

Bracket
(In front of the safety helmet)

Skidproof cushion
(At the pocket of the shirt)

Hook x 3

STANDARD ELECTRIC WORKS CO., LTD.
www.sew.com.tw

5F., NO.105, JHONGCHENG RD., TUCHENG DIST.,
NEW TAIPEI CITY 23674, TAIWAN (R.O.C.)
TEL: 886-2-22681528
FAX: 886-2-22681529
e-mail: sales@sew.com.tw

Model
286 SVD

V 02